Structural Concepts Engineering
1200 N. Jefferson St, Suite F
Anaheim, CA 92807
Tel: 714.632.7330 Fax: 714.632.7763
e-mail: mail@sceinc.net

Project Name : SHELVING CONCEPTS
Project Number : M-080312-2
Date : 07/03/12
Street Address : 3244 FISHER STREET
City/State : HOUSTON, TX, 77018
Scope of Work : POST STATIC CAPACITY STUDY.

JUL 0 3 2012

ALI ABOLHASSANI
STATE OF TEXAS
LICENSED
PROFESSIONAL ENGINEER
EXPIRES
JUN 30 2013

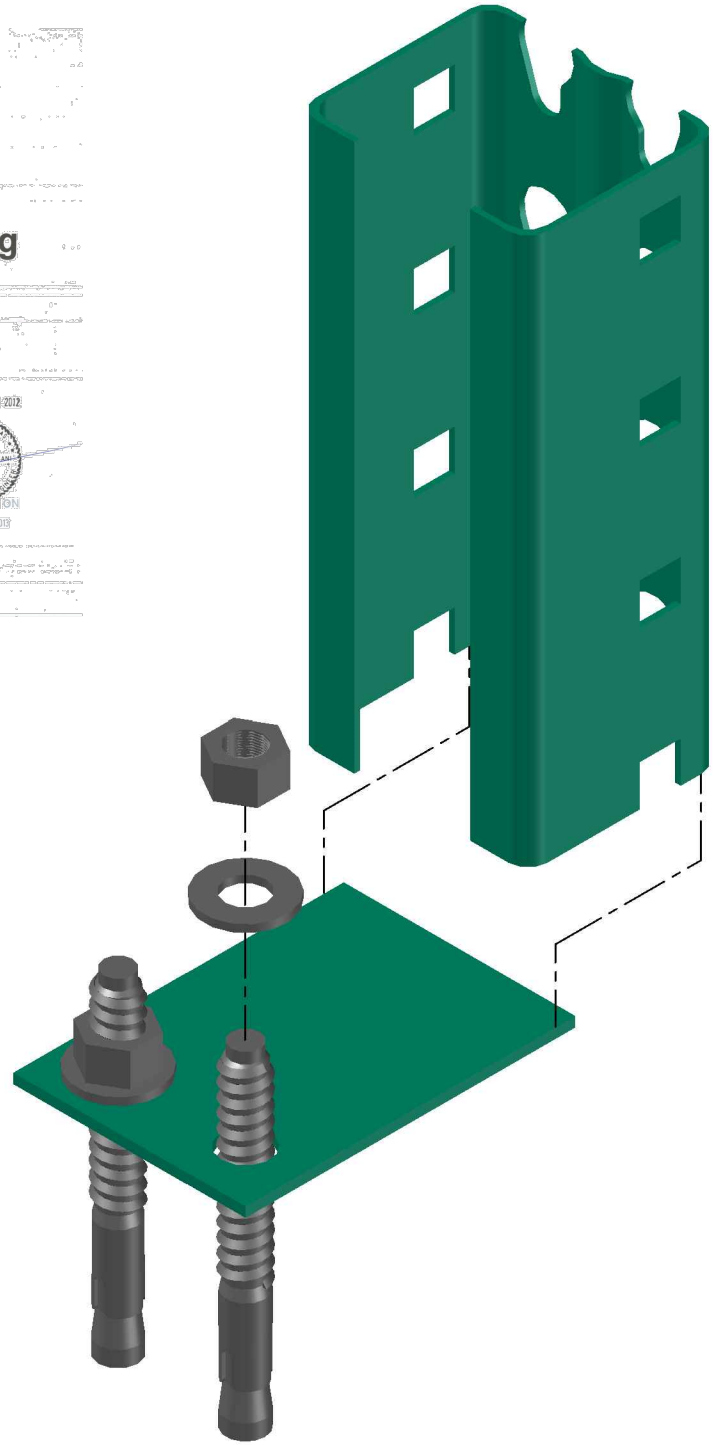

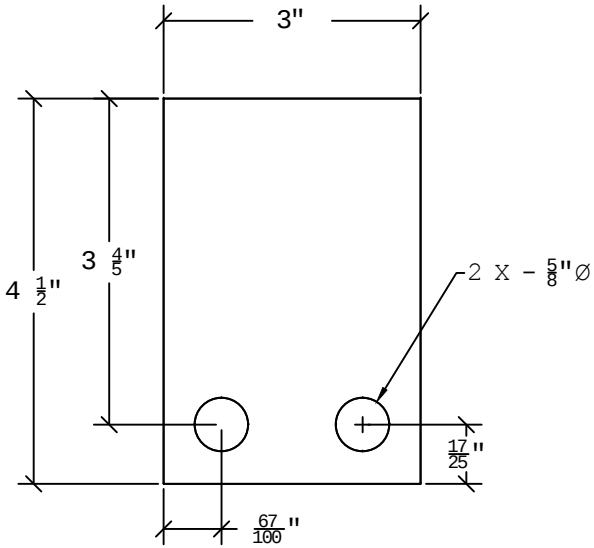

Top View of Footplate
10 Gage Steel (THK- .1345")

SHELVING CONCEPTS

SHEET 1 OF 1

01

Structural Concepts Engineering
1200 N. Jefferson St, Suite F
Anaheim, CA 92807
Tel: 714.632.7330 Fax: 714.632.7763
e-mail: mail@sceinc.net

Project Name: SHELVING CONCEPTS
Project Number: H-010310-2
Date: 07/03/10
Street Address: 3241 FISHER STREET
City/State: HOUSTON, TX 77018
Scope of Work: POST STATIC CAPACITY STUDY

JUL 03 2010

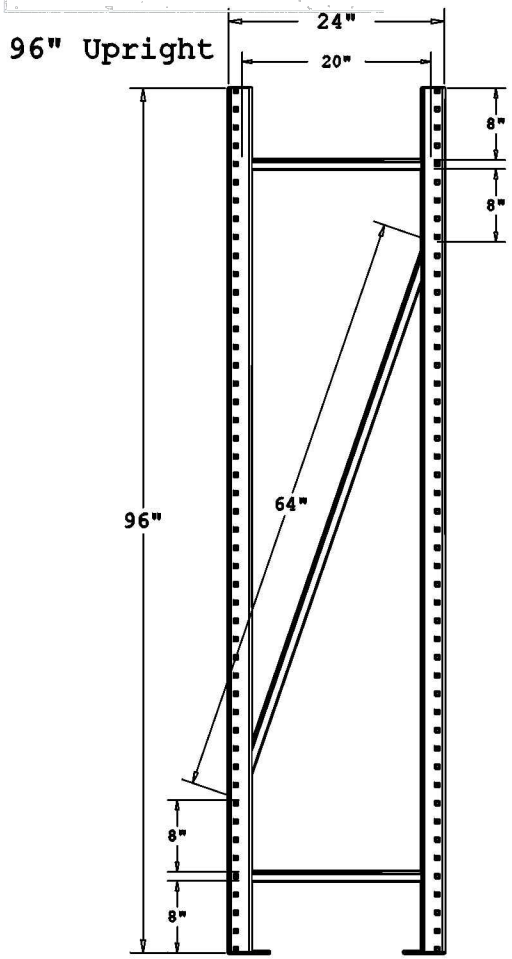

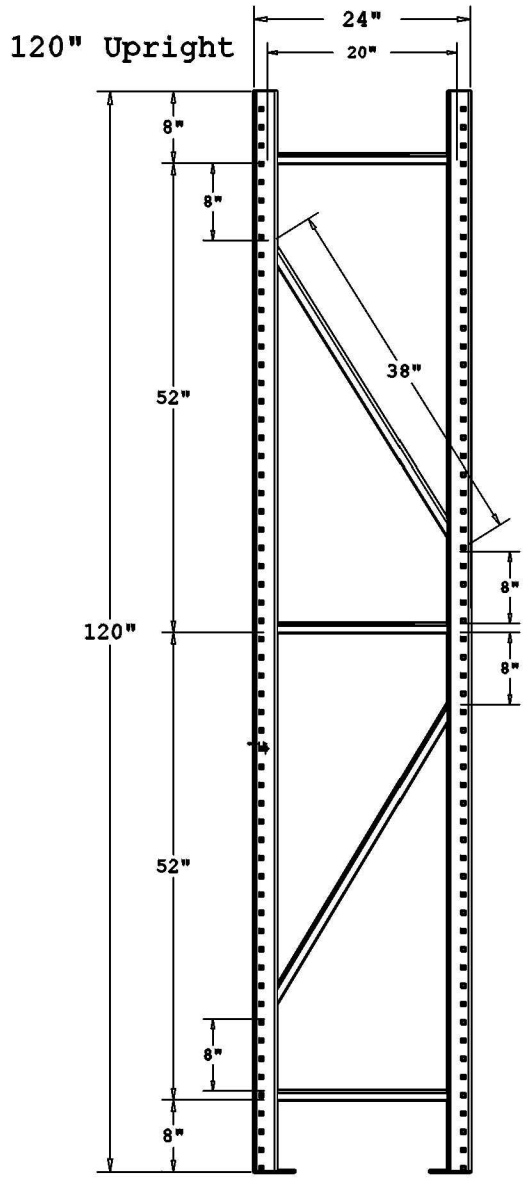

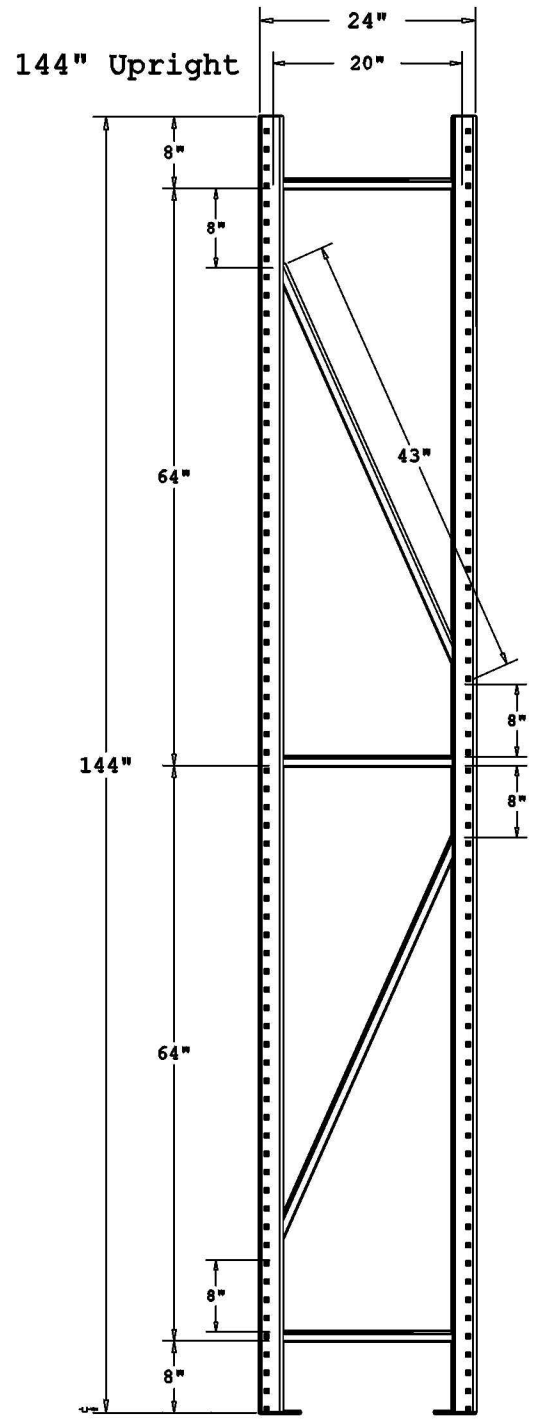

Notes:
- All Uprights are F-20, 14 gage steel
- All Bracing 1 $\frac{1}{2}$" X 1"
- All joints 1"- 1 $\frac{1}{2}$" weld
- Footplate: 10 gage steel, 3" X 4 $\frac{1}{2}$"

SHEET 1 OF 1

SHELVING CONCEPTS

01

Structural Concepts Engineering
1200 N. Jefferson St, Suite F
Anaheim, CA 92807
Tel: 714.632.7330 Fax: 714.632.7763
e-mail: mail@sceinc.net

Project Name: SHELVING CONCEPTS
Project Number: H-010310-2
Date: 07/03/10
Street Address: 3241 FISHER STREET
City/State: HOUSTON, TX 77018
Scope of Work: POST STATIC CAPACITY STUDY

JUL 03 2010

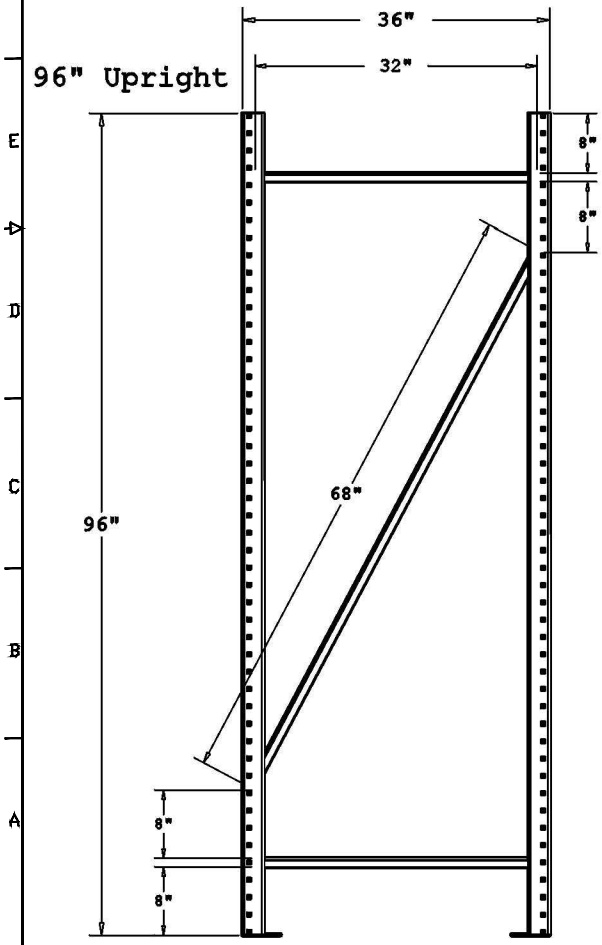

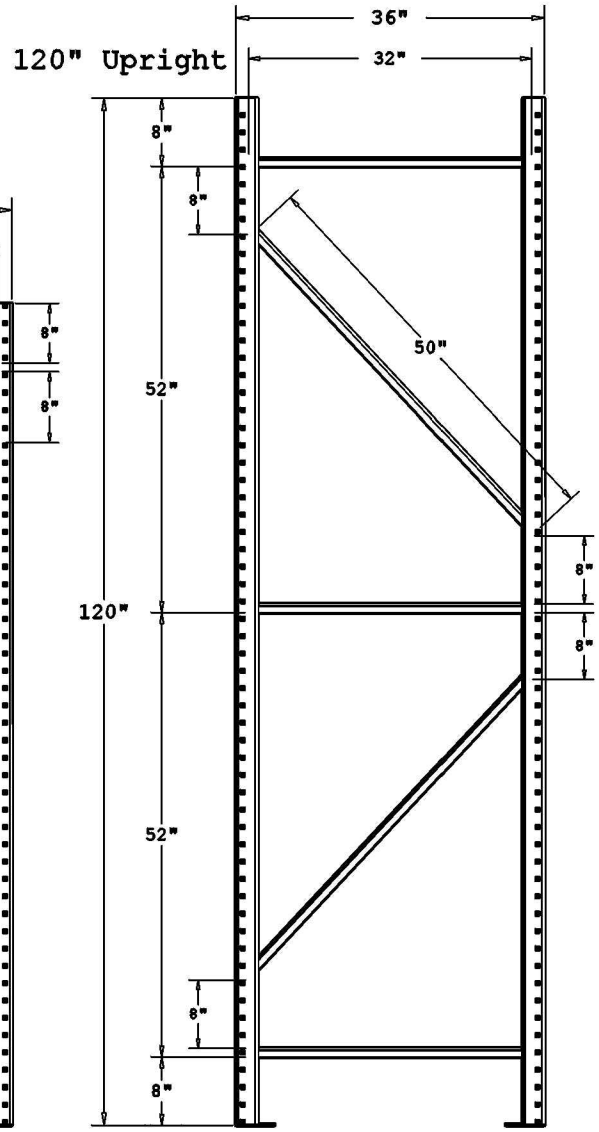

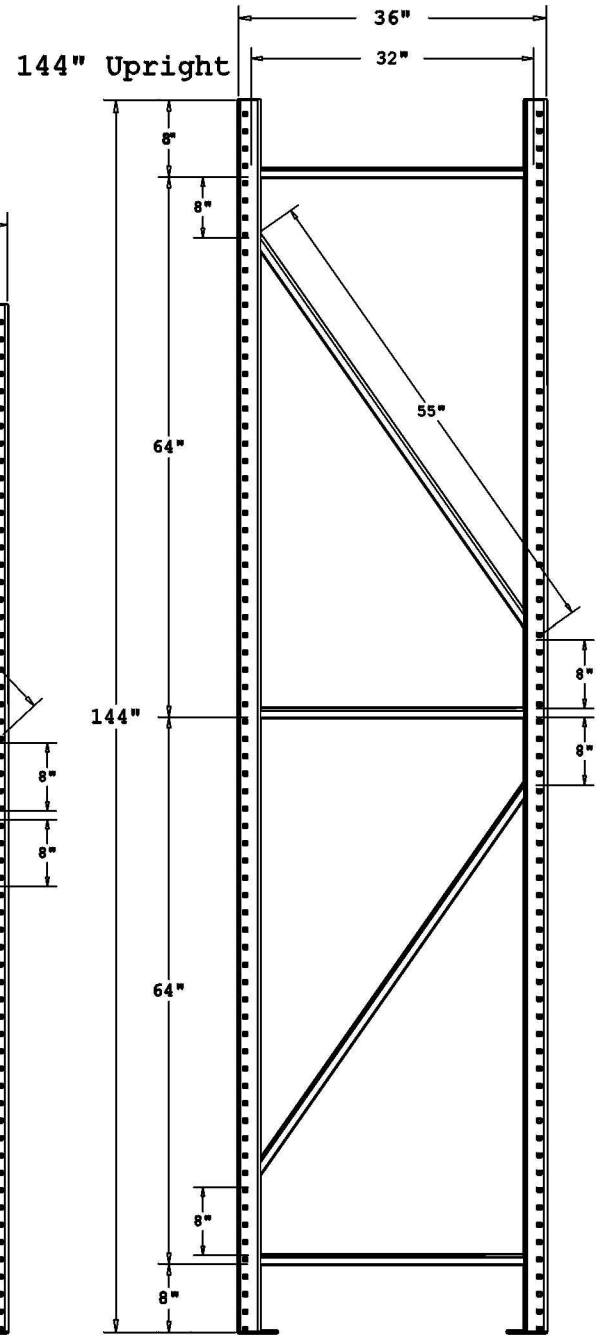

Notes:
- All Uprights are F-20, 14 gage steel
- All Bracing 1 $\frac{1}{2}$" X 1"
- All joints 1"- 1 $\frac{1}{2}$" weld
- Footplate: 10 gage steel, 3" X 4 $\frac{1}{2}$"

SHEET 1 OF 1

SHELVING CONCEPTS

01

Structural Concepts Engineering
1200 N. Jefferson St, Suite F
Anaheim, CA 92807
Tel: 714.632.7330 Fax: 714.632.7763
e-mail: mail@sceinc.net

Project Name: SHELVING CONCEPTS
Project Number: H-010310-2
Date: 07/03/10
Sheet Address: 3241 FISHER STREET
City/State: HOUSTON, TX 77018
Scope of Work: POST STATIC CAPACITY STUDY

JUL 03 2010

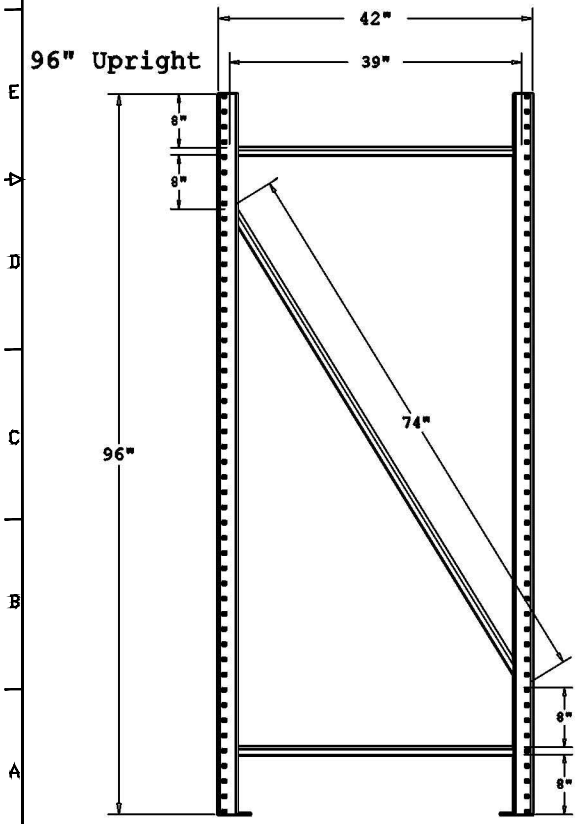

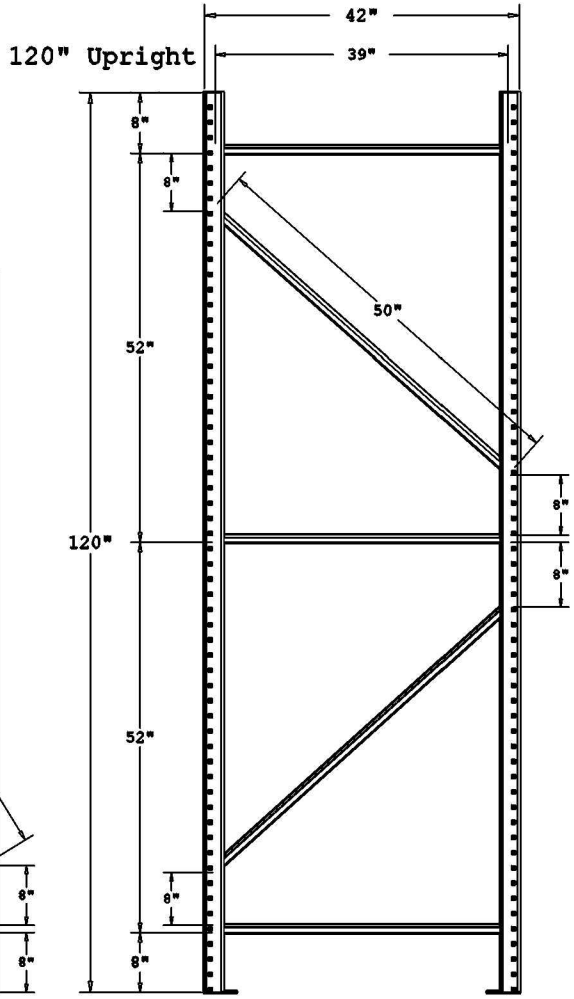

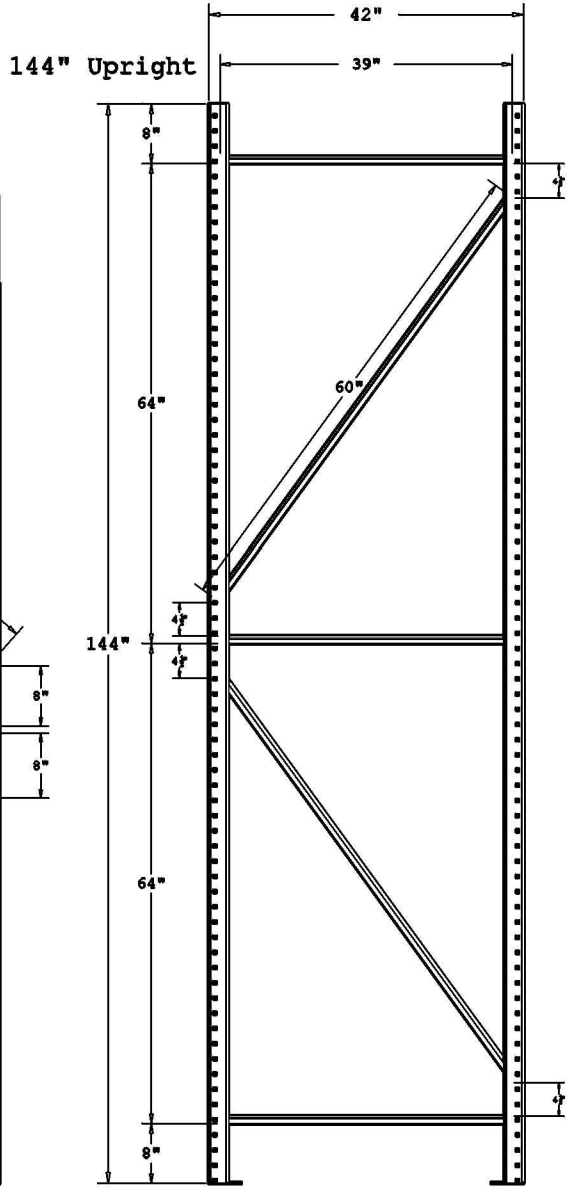

Notes:
- All Uprights are F-20, 14 gage steel
- All Bracing 1 $\frac{1}{2}$" X 1"
- All joints 1"- 1 $\frac{1}{2}$" weld
- Footplate: 10 gage steel, 3" X 4 $\frac{1}{2}$"

SHEET 1 OF 1

SHELVING CONCEPTS

01

Structural Concepts Engineering
1200 N. Jefferson St, Suite F
Anaheim, CA 92807
Tel: 714.632.7330 Fax: 714.632.7763
e-mail: mail@sceinc.net

Project Name: SHELVING CONCEPTS
Project Number: H-010310-2
Date: 07/03/10
Street Address: 3241 FISHER STREET
City/State: HOUSTON, TX 77018
Scope of Work: POST STATIC CAPACITY STUDY

JUL 03 2010

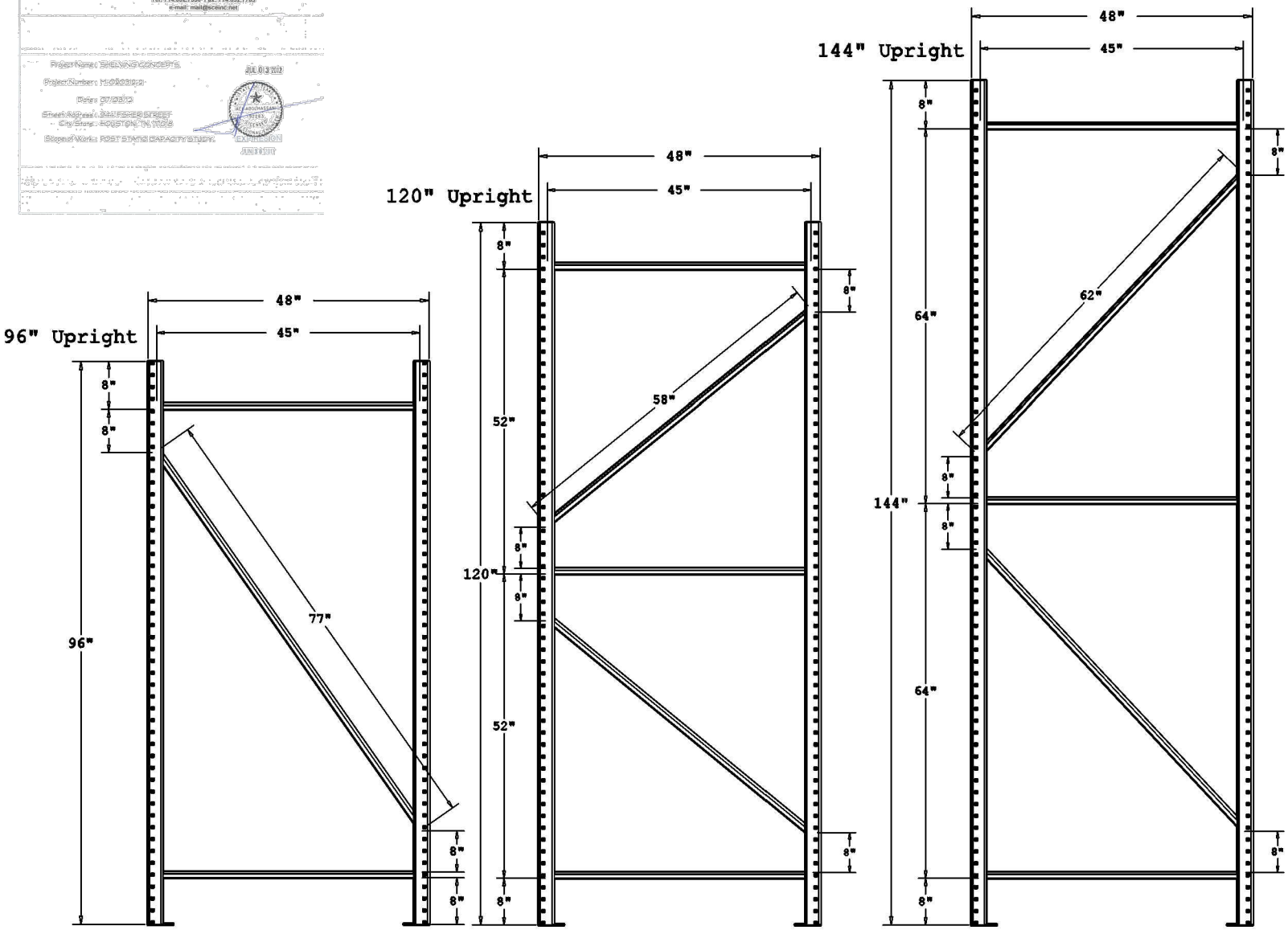

Notes:
- All Uprights are F-20, 14 gage steel
- All Bracing 1 1/2" X 1"
- All joints 1"- 1 1/2" weld
- Footplate: 10 gage steel, 3" X 4 1/2"

SHEET 1 OF 1

SHELVING CONCEPTS

01

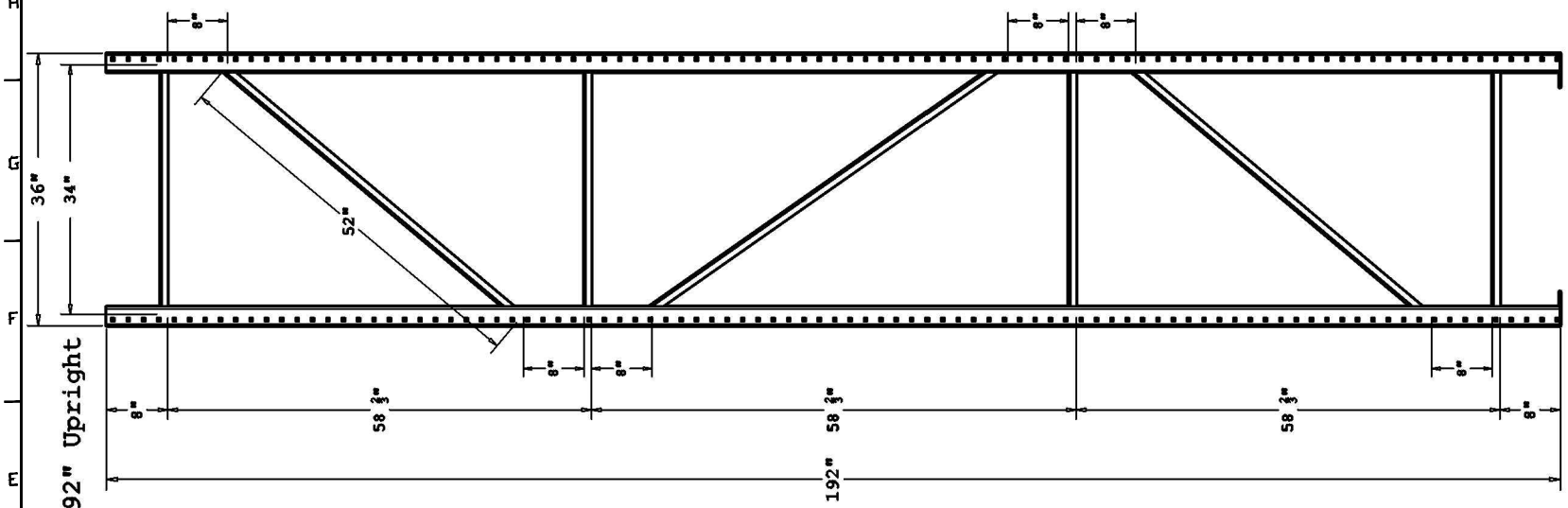

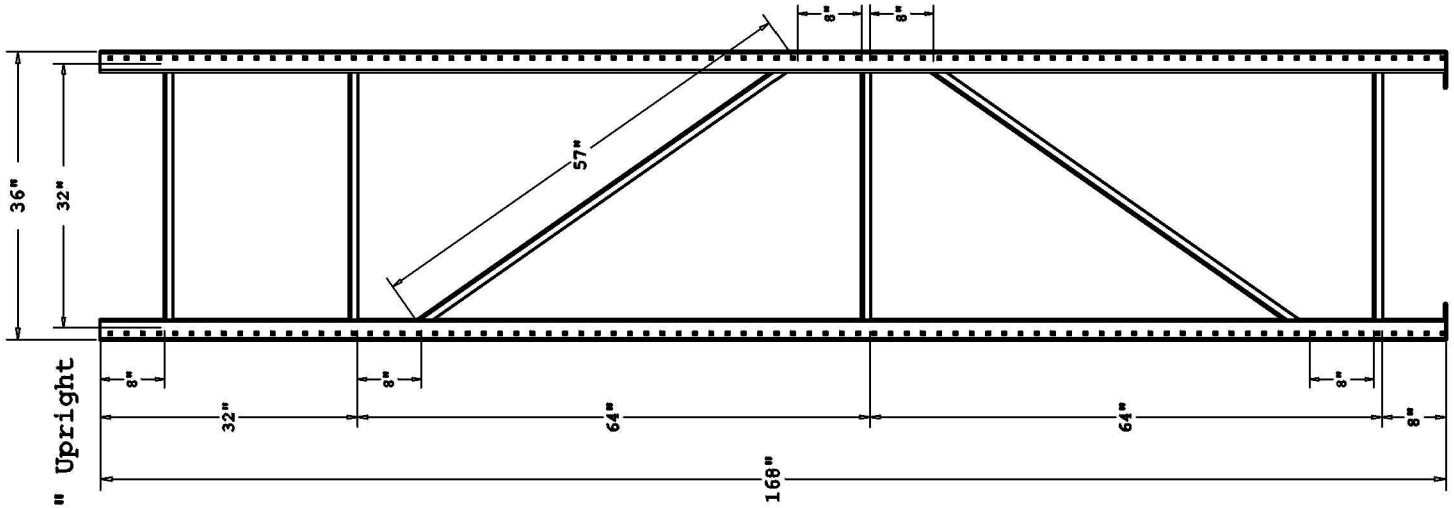

Notes:
- All Uprights are F-20, 14 gage steel
- All Bracing 1 1/2" X 1"
- All joints 1"- 1 1/2" weld
- Footplate: 10 gage steel, 3" X 4 1/2"

Structural Concepts Engineering

SHELVING CONCEPTS

SHEET 1 OF 1

01

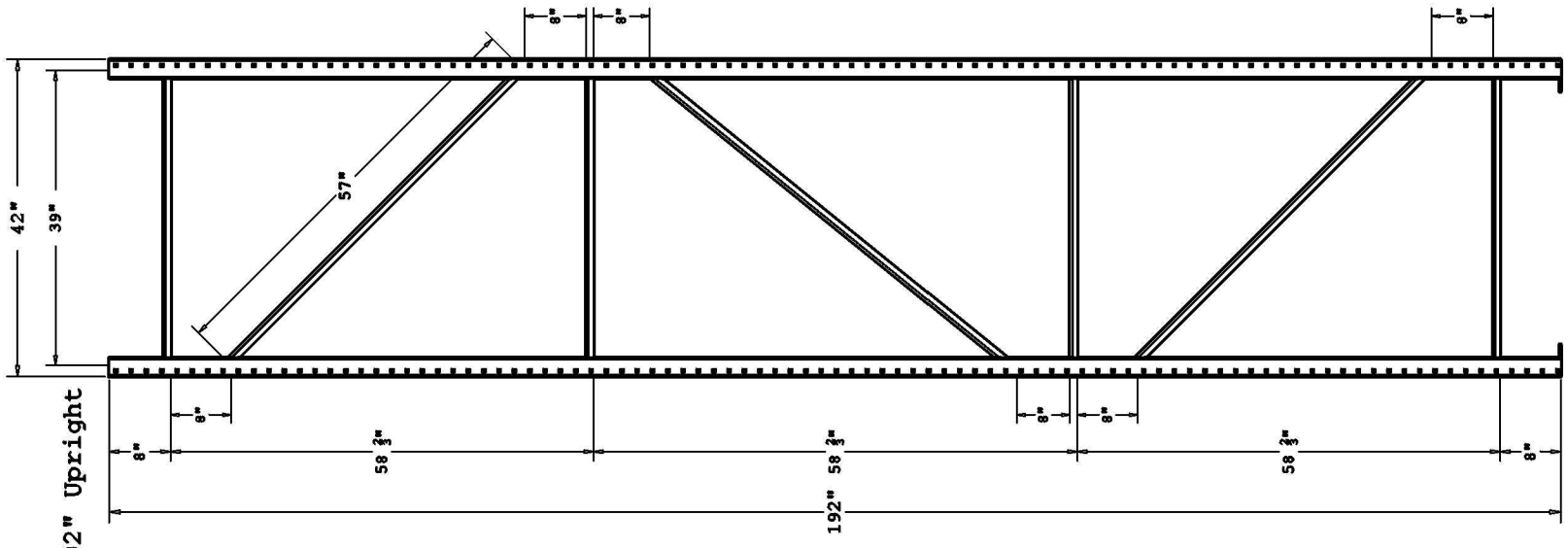

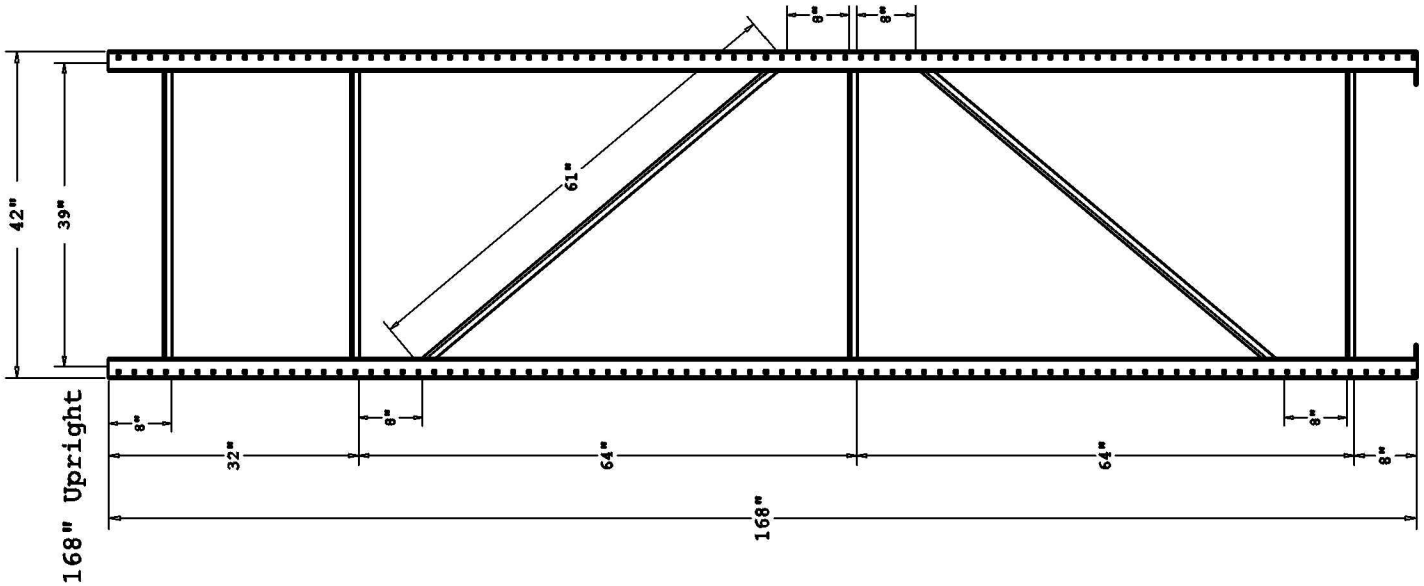

Structural Concepts Engineering

Notes:
- All Uprights are F-20, 14 gage steel
- All Bracing 1 1/2" X 1"
- All joints 1"- 1 1/2" weld
- Footplate: 10 gage steel, 3" X 4 1/2"

SHEET 1 OF 1

SHELVING CONCEPTS

01

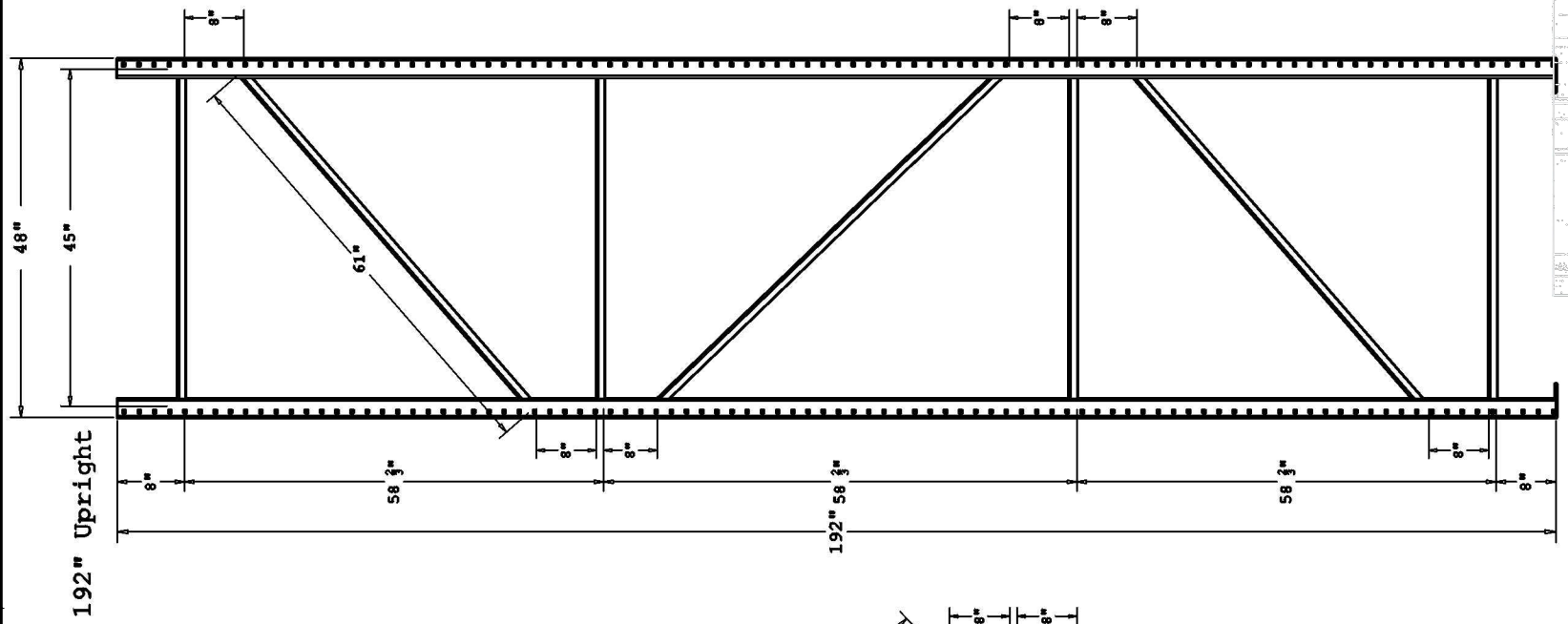

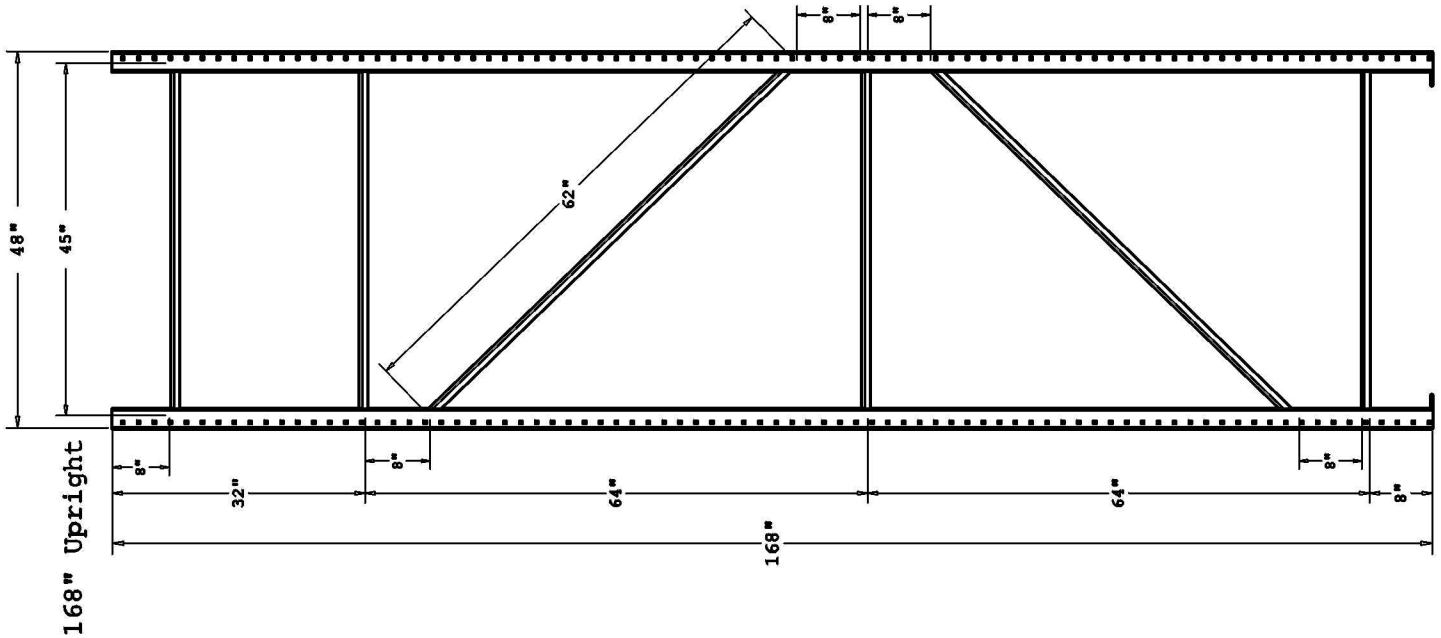

Structural Concepts Engineering

Notes:
- All Uprights are F-20, 14 gage steel
- All Bracing 1 1/2" X 1"
- All joints 1"- 1 1/2" weld
- Footplate: 10 gage steel, 3" X 4 1/2"

SHELVING CONCEPTS

01

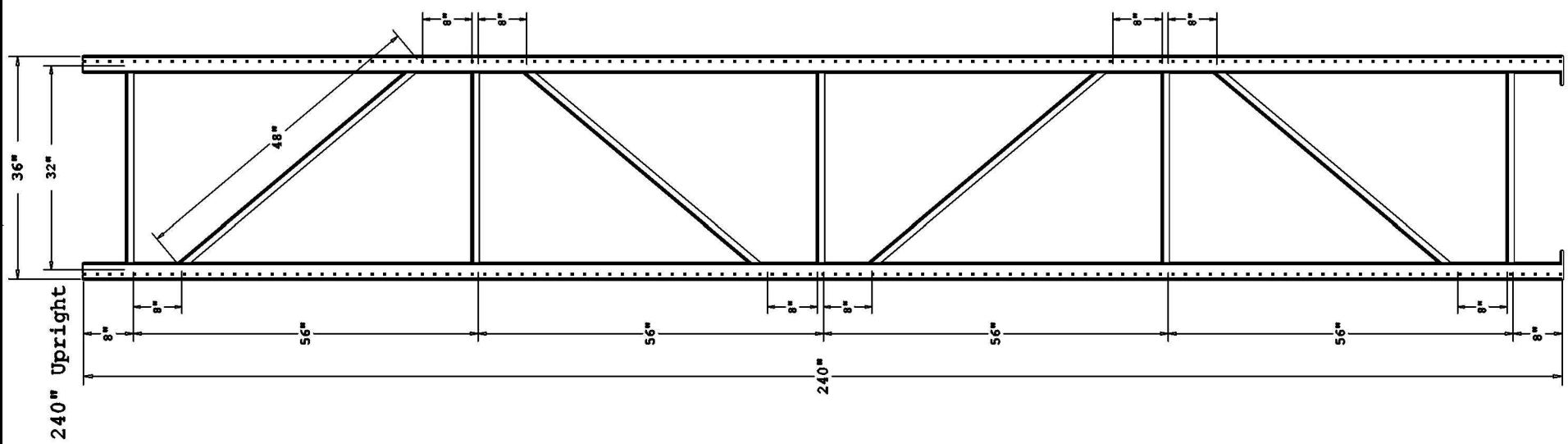

Notes:
- All Uprights are F-20, 14 gage steel
- All Bracing 1 $\frac{1}{2}$" X 1"
- All joints 1"- 1 $\frac{1}{2}$" weld
- Footplate: 10 gage steel, 3" X 4 $\frac{1}{2}$"

SHELVING CONCEPTS

01

Structural
Concepts
Engineering
1200 N. Jefferson St. Suite F
Anaheim, CA 92807
Tel: 714.632.7335, Fax: 714.632.2763
E-mail: mail@scenetwork.net

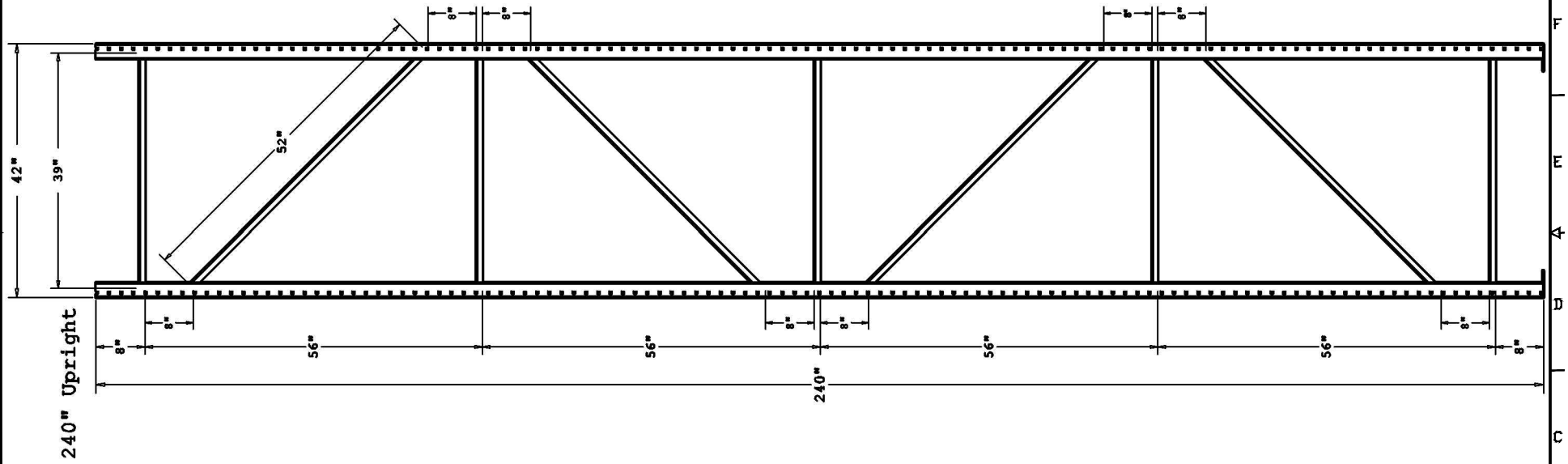

Notes:
- All Uprights are F-20, 14 gage steel
- All Bracing 1 ½" X 1"
- All joints 1"- 1 ½" weld
- Footplate: 10 gage steel, 3" X 4 ½"

SHEET 1 OF 1

SHELVING CONCEPTS

01

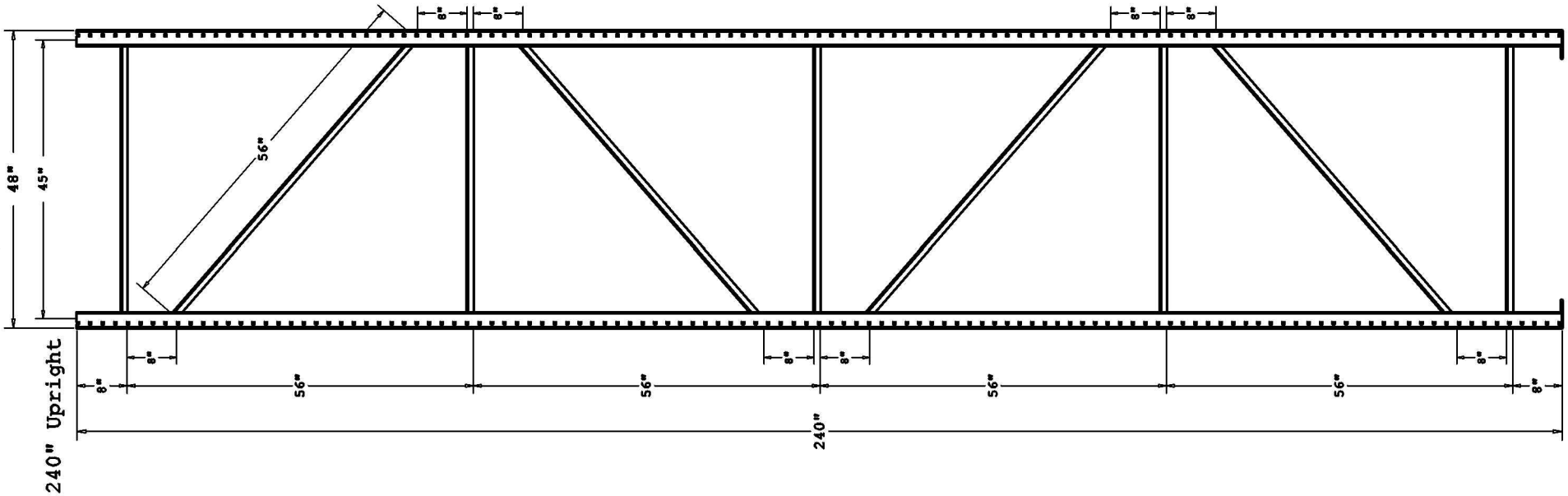

Notes:
- All Uprights are F-20, 14 gage steel
- All Bracing 1 ½" X 1"
- All joints 1"- 1 ½" weld
- Footplate: 10 gage steel, 3" X 4 ½"

SHEET 1 OF 1

SHELVING CONCEPTS

01

Structural Concepts Engineering
1200 N. Jefferson St, Suite F
Anaheim, CA 92807
Tel: 714.632.7330 Fax: 714.632.7763
e-mail: mail@sceinc.net

Project Name: SHELVING CONCEPTS
Project Number: H-010310-2
Date: 07/03/10
Street Address: 3241 FISHER STREET
City/State: HOUSTON, TX 77018
Scope of Work: POST STATIC CAPACITY STUDY

JUL 03 2010

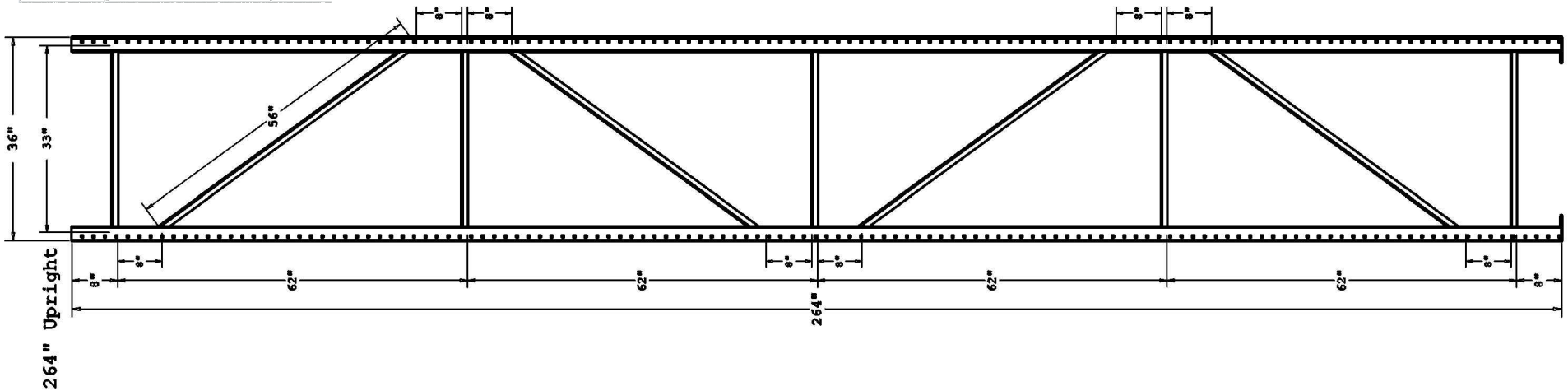

SHELVING CONCEPTS

SHEET 1 OF 1

01

Structural Concepts Engineering
1200 N. Jefferson St, Suite F
Anaheim, CA 92807
Tel: 714.632.7330 Fax: 714.632.7763
e-mail: mail@sceinc.net

Project Name: SHELVING CONCEPTS
Project Number: H-010310-2
Date: 07/03/10
Street Address: 3241 FISHER STREET
City/State: HOUSTON, TX 77018
Scope of Work: POST STATIC CAPACITY STUDY

JUL 03 2010

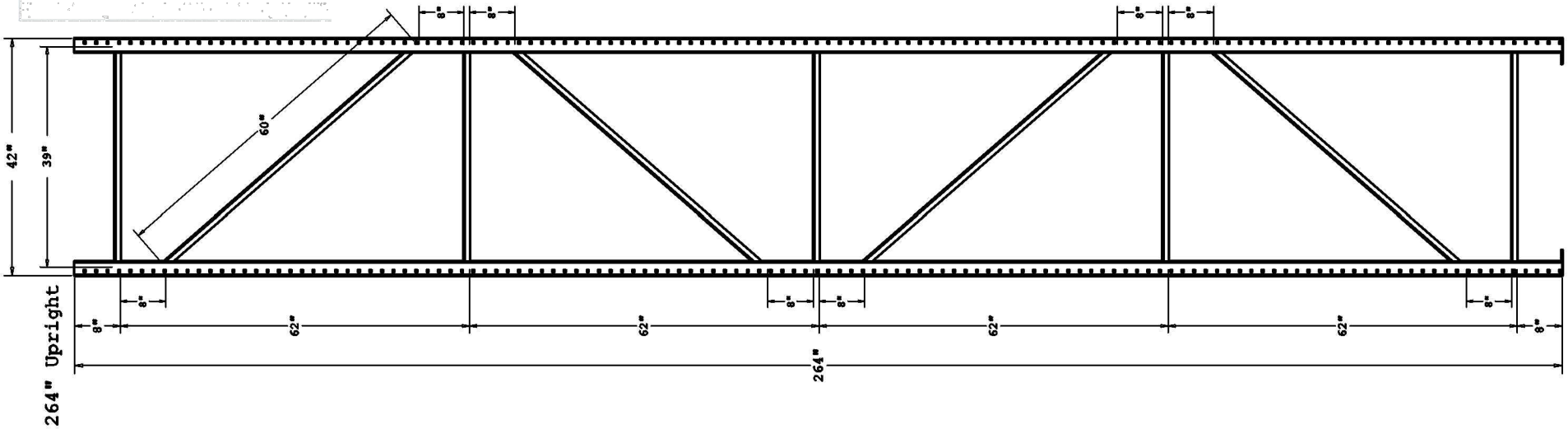

Notes:
- All Uprights are F-20, 14 gage steel
- All Bracing 1 ½" X 1"
- All joints 1"- 1 ½" weld
- Footplate: 10 gage steel, 3" X 4 ½"

SHEET 1 OF 1

SHELVING CONCEPTS

01

Structural Concepts Engineering
1200 N. Jefferson St. Suite F
Anaheim, CA 92807
Tel: 714.632.7330 Fax: 714.632.7763
e-mail: mail@sceinc.net

Project Name: SHELVING CONCEPTS
Project Number: M-0[illegible]
Date: 07/03/12
Street Address: 2241 FISHER STREET
City/State: HOUSTON, TX 77018
Scope of Work: POST STATIC CAPACITY STUDY

JUL 0 3 2012

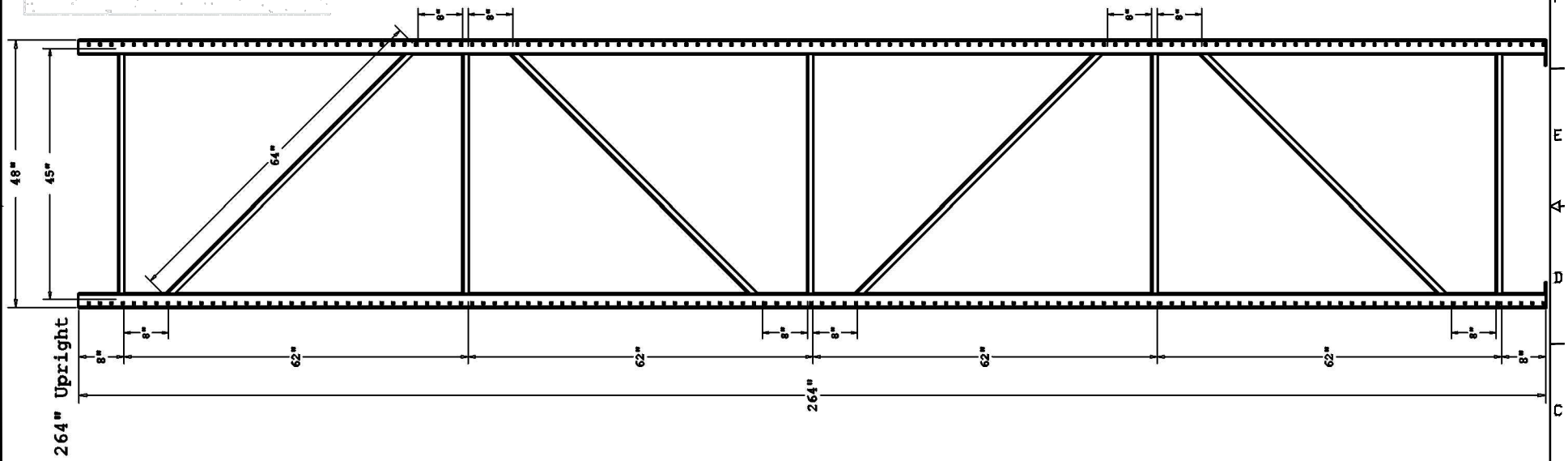

SHEET 1 OF 1

SHELVING CONCEPTS

01